SEAQUEST FLAMMABLE GAS
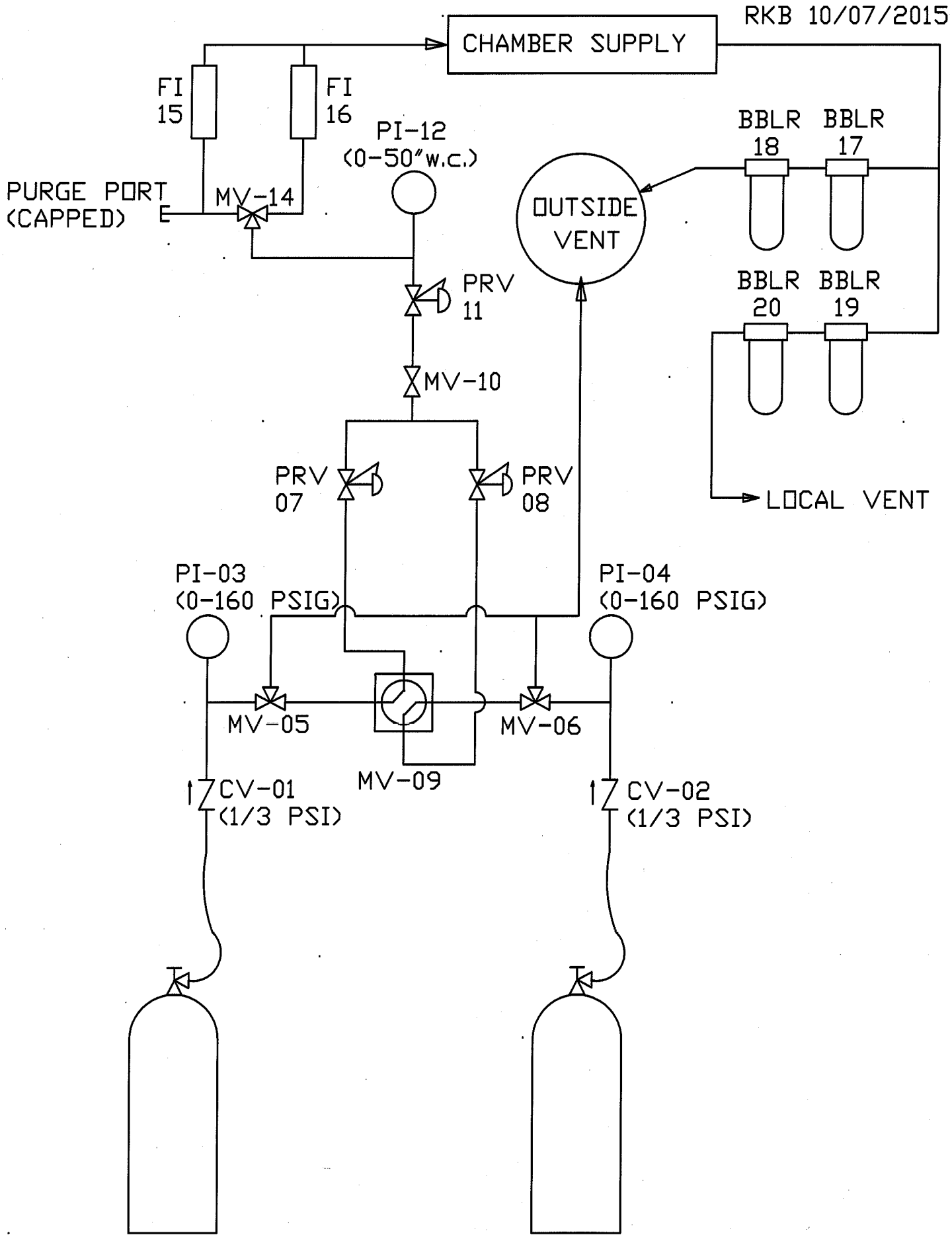
RKB 10/07/2015