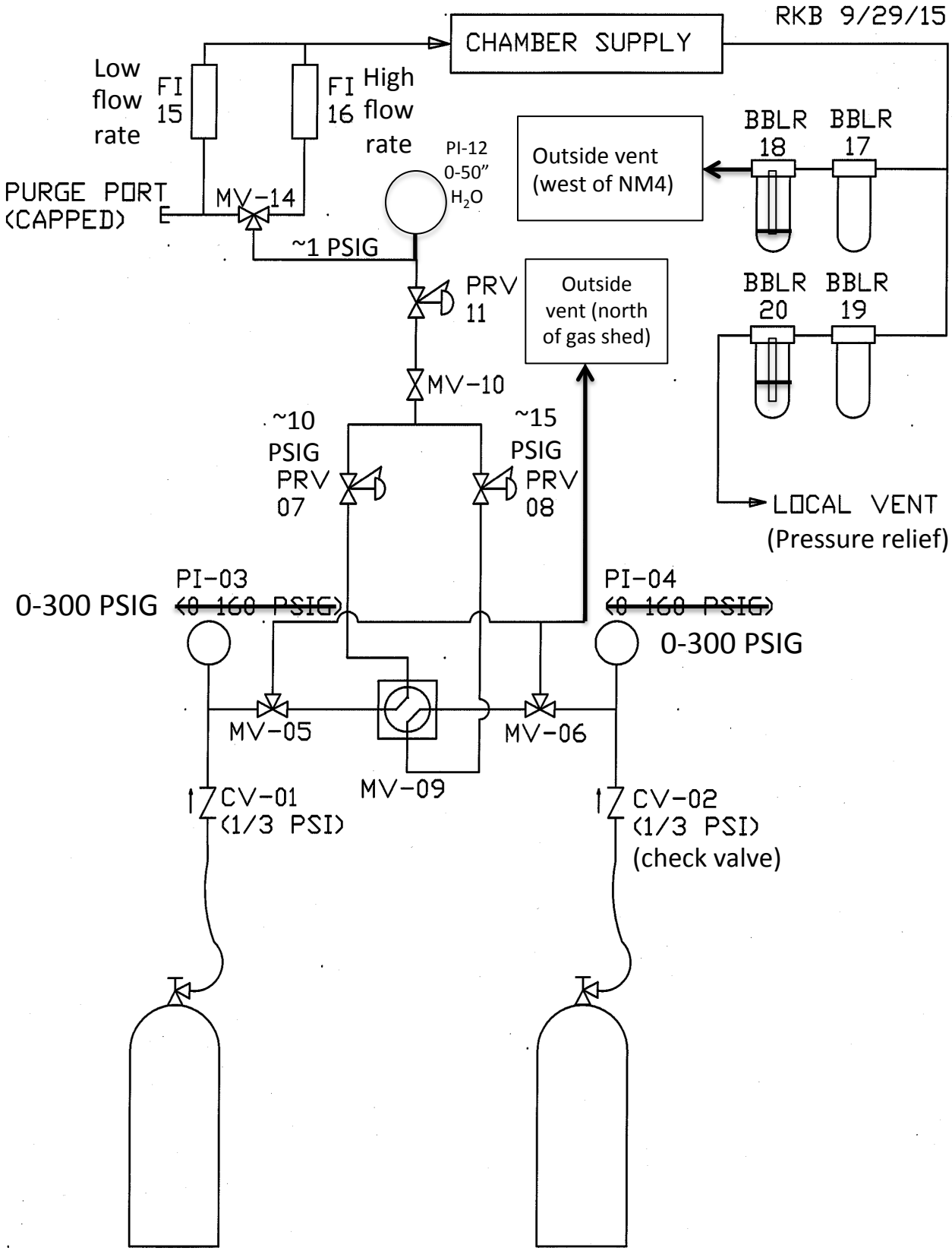SEAQUEST FLAMMABLE GAS