Engineering Note
for
E906 Detector Assembly

PROJECT: E906

TITLE: Load Testing of 80/20 Inc. Extrusions and Joints

AUTHOR: Tom O'Connor – Argonne National Laboratory

DATE: August 15, 2013

REVIEWER(S): Kevin Bailey – Argonne National Laboratory

ABSTRACT: This document describes load testing on a series of joint designs using aluminum extrusions and fasteners from 80/20 Inc.

INTRODUCTION: Many of the detectors in the E906 experiment are assembled in frameworks built from aluminum extrusions and fasteners produced by 80/20 Incorporated. 80/20 provides a modular framing system of light-weight extrusions along with fasteners and joining plates which can be configured to satisfy different design requirements. The extrusions and joining plates are made from 6105-T5 aluminum. In an attempt to learn more about the strength of these joints load testing was performed on four different designs which are representative of those used in E906. The testing was performed at Fermilab using an Instron 4411 Tensile Tester. This device can accommodate parts up to 1 inch thick and can apply a force of 1000 lbs. If the joints do not fail then the maximum applied load will be considered to be the Ultimate Load and Allowable Loads will be calculated relative to this value.

DESIGN: The E906 experiment uses a variety of joining and fastening techniques such as in-line joints, end fasteners, and corners. Testing for this report was performed on 4 different designs. The details of the designs are discussed separately in the following paragraphs.

IN-LINE JOINT:
The in-line joint design consists of two separate 1020 extrusions placed end to end and held together with standard 8-hole joining plates on each face. See Figure 1. The joining plates are clamped to the extrusions using ¼-20 screws that are fastened to tee-nuts which reside in the channel of the extrusion. More information on the tee nuts is available at http://www.8020.net/Product-Catalog.asp. Failure of this joint would be due to the tee nuts slipping within the channel so that that a gap formed between the extrusions.

END FASTENER:
The end fastener design consists of a single 1030 extrusion with a block secured to the end. See Figure 2. The block is secured by three ¼-20 screws which are attached via tapped holes in the end of the extrusion. Failure of this joint could come about from the screws failing under tension or from thread shear in the tapped holes in the extrusion.

CORNERS:
The corners used for this report are combinations of inline and end fastener techniques which use joining plates and tapped holes in the end of the extrusions. Two different corner designs were tested. The first design, the 4X Test Joint, consists of two 1020 extrusions with 12 hole joining plates on each face as well as ¼-20 screws attached via tapped holes in the end of one extrusion. See Figure 3. This joint was oriented such that the load would be applied perpendicular to the end fasteners and those screws would undergo a shear stress. The second design, the 4Y Test Joint, also consists of two 1020 extrusions with 12 hole joining plates and ¼-20 screws in the end of one extrusion. See Figure 4. This joint was oriented such that the applied load would be parallel to the end fasteners and those screws in the tapped holes would undergo tensile stress. In both cases the end fasteners were assembled with grade 5 bolts. Failure of either of the corner joints would be the result of slipping of the tee nuts within the channel, failure of the grade 5 screws under tension or shear, or thread shear in the tapped holes.

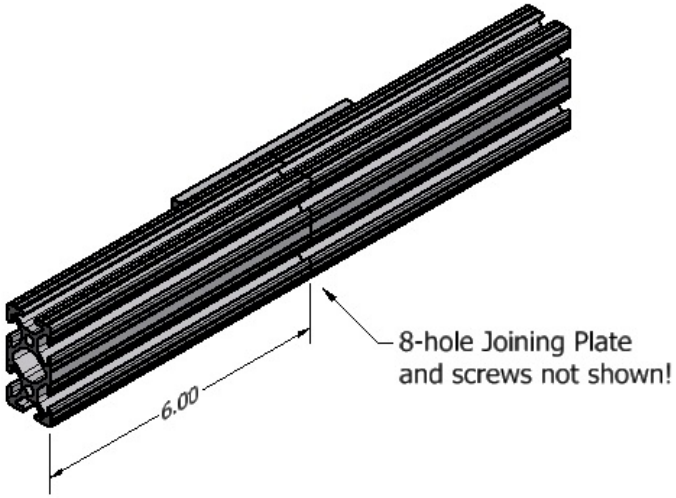

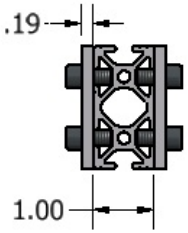

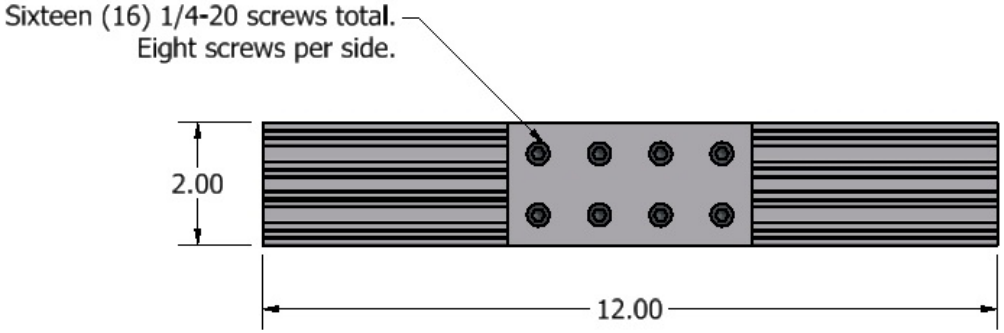

Figure 1 - In-Line Test Joint

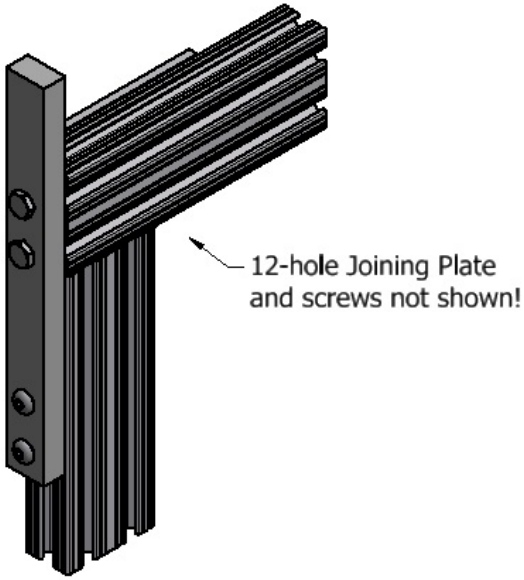

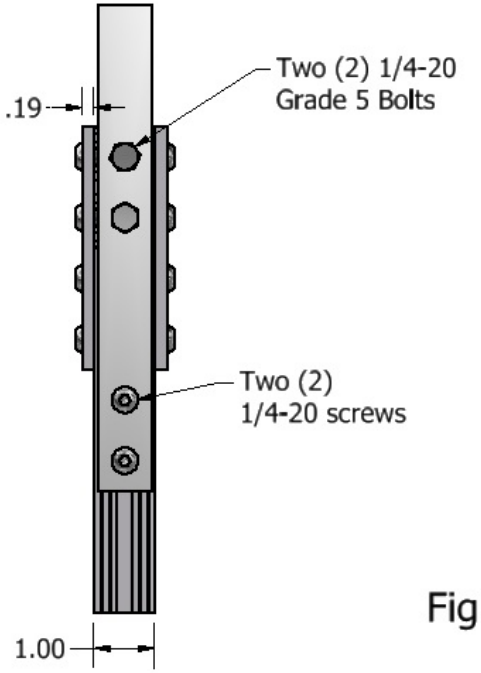

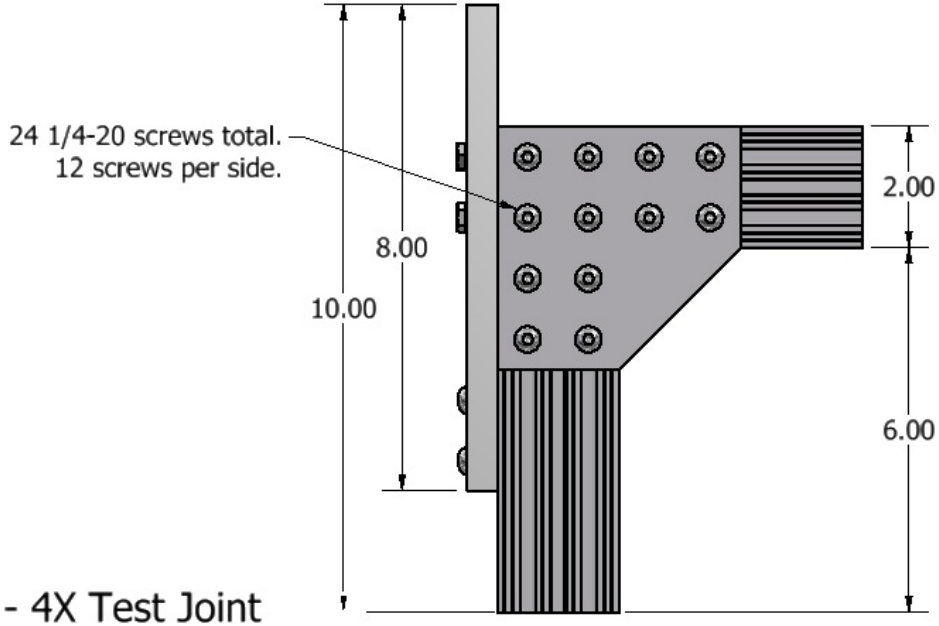

Figure 3 - 4X Test Joint

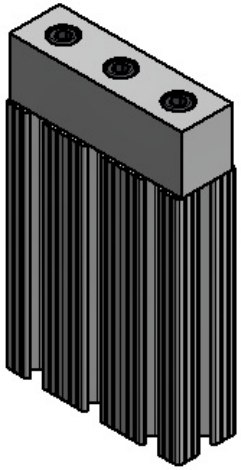

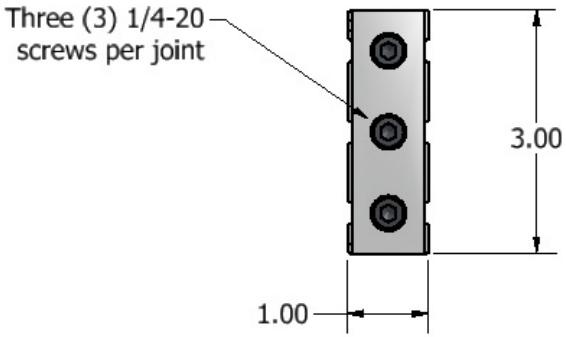

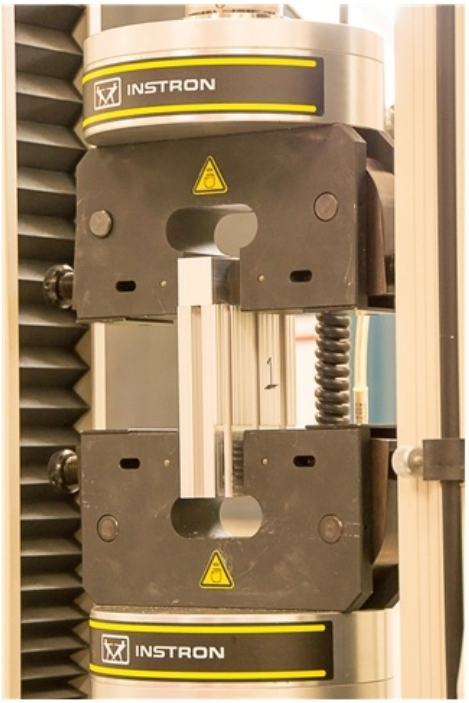

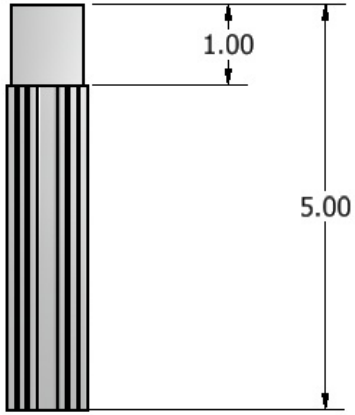

Figure 2 - End Fastener Test Joint

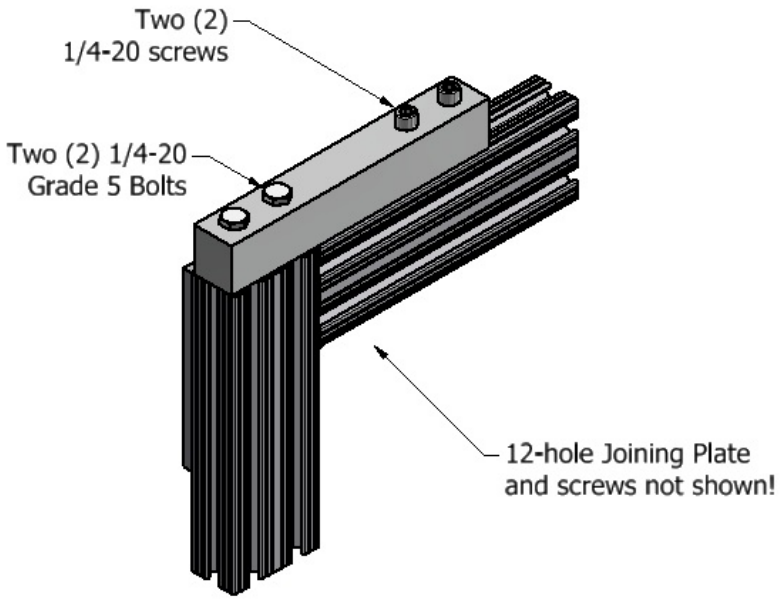

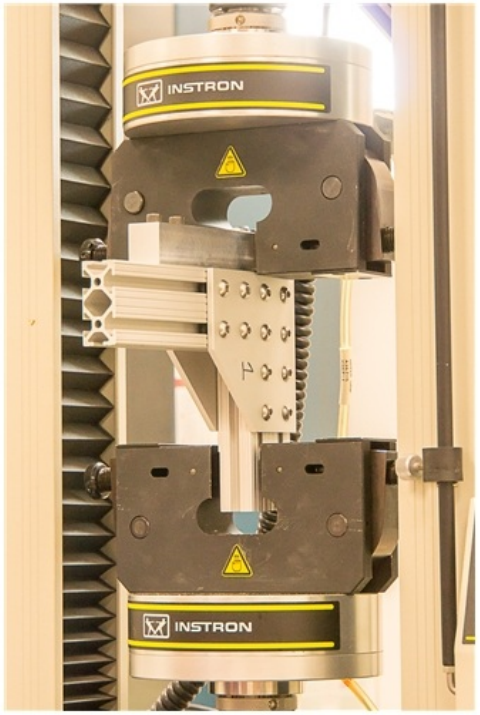

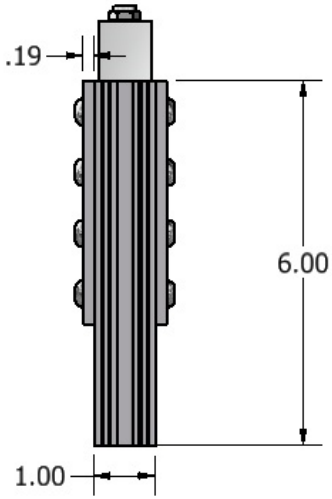

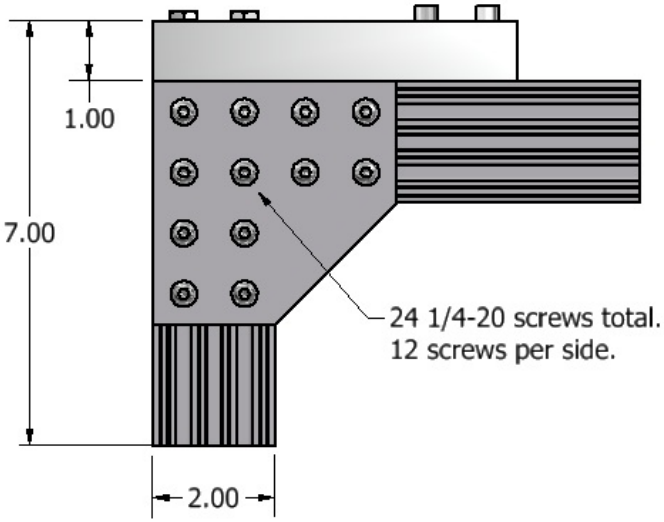

Figure 4 - 4Y Test Joint

ANALYSIS: For each design to be tested, three samples were prepared and placed in the Instron 4411 Tensile Tester at Fermilab for a total of 12 tests. Applied torque on all screws was within limits specified by the 80/20 catalog. The tensile tester was fitted with a load cell with a capacity of 1000 lbs. Once the parts were installed, the Instron 4411 would increase the load while measuring the strain until either the part failed or the applied load reached 1000 lbs., at which point the load would be released. A summary of the test results is provided in the following table:

Joint Design	Ultimate Load (lb)	Allowable Load (lb)	Strain (in)
In-Line Fastener #1	982	327.3	0.048
In-Line Fastener #2	981	327.0	0.050
In-Line Fastener #3	981	327.0	0.048
Avg.	***981.3***	**327.1**	***0.049***
End Fastener #1	1004	334.7	0.044
End Fastener #2	1003	334.3	0.040
End Fastener #3	1004	334.7	0.041
Avg.	***1003.7***	**334.6**	***0.042***
4X Corner #1	980	326.7	0.045
4X Corner #2	982	327.3	0.044
4X Corner #3	980	326.7	0.054
Avg.	***980.7***	**326.9**	***0.048***
4Y Corner #1	1003	334.3	0.044
4Y Corner #2	1002	334.0	0.048
4Y Corner #3	1003	334.3	0.042
Avg.	***1002.7***	**334.2**	***0.045***

Torque Values:
In-Line Joining Plate/T-nut Torque = 72in-lb
End Fastener Bolts Torque = 150in-lb
Corner Joining Plate/T-nut Torque = 72in-lb
Corner End Bolts Torque =150in-lb

Maximum Allowable Torque Per 8020 Catalog:
Max Torque for Joining Plate/T-nut = 6ft-lb (72in-lb)
Max Torque for End Fastener = 17ft-lb (204in-lb)
Max Torque for Anchor Fastener = 17ft-lb (204in-lb)*
*for reference only - anchor fasteners not tested

Table I – Maximum Loads, Allowable Loads and Strain for 80/20 Test Joints

In all cases the parts under test were able to withstand the maximum load without showing any signs of failure and all tests were stopped automatically when maximum load was achieved. For the purposes of this report, the maximum load is assumed to be the Ultimate Load and Allowable Loads shown in Table I are one-third of the Ultimate load. This assumption provides the most conservative estimate of Allowable Loads for these joints, tested in these configurations. Summary plots for the in-line joints, end fasteners, 4X corners, and 4Y corners are shown in Figures 5, 6, 7, and 8 respectively. Although the joints were not tested until failure, the tests show that each joint type was able to withstand at least 980 pounds. Finally, Table II lists the various detectors in E906 that are built using 8020 frames. Also listed in Table are the total weights of each detector, the weights per 8020 joint of each detector, the applicable joints, Allowable Load, and safety factor.

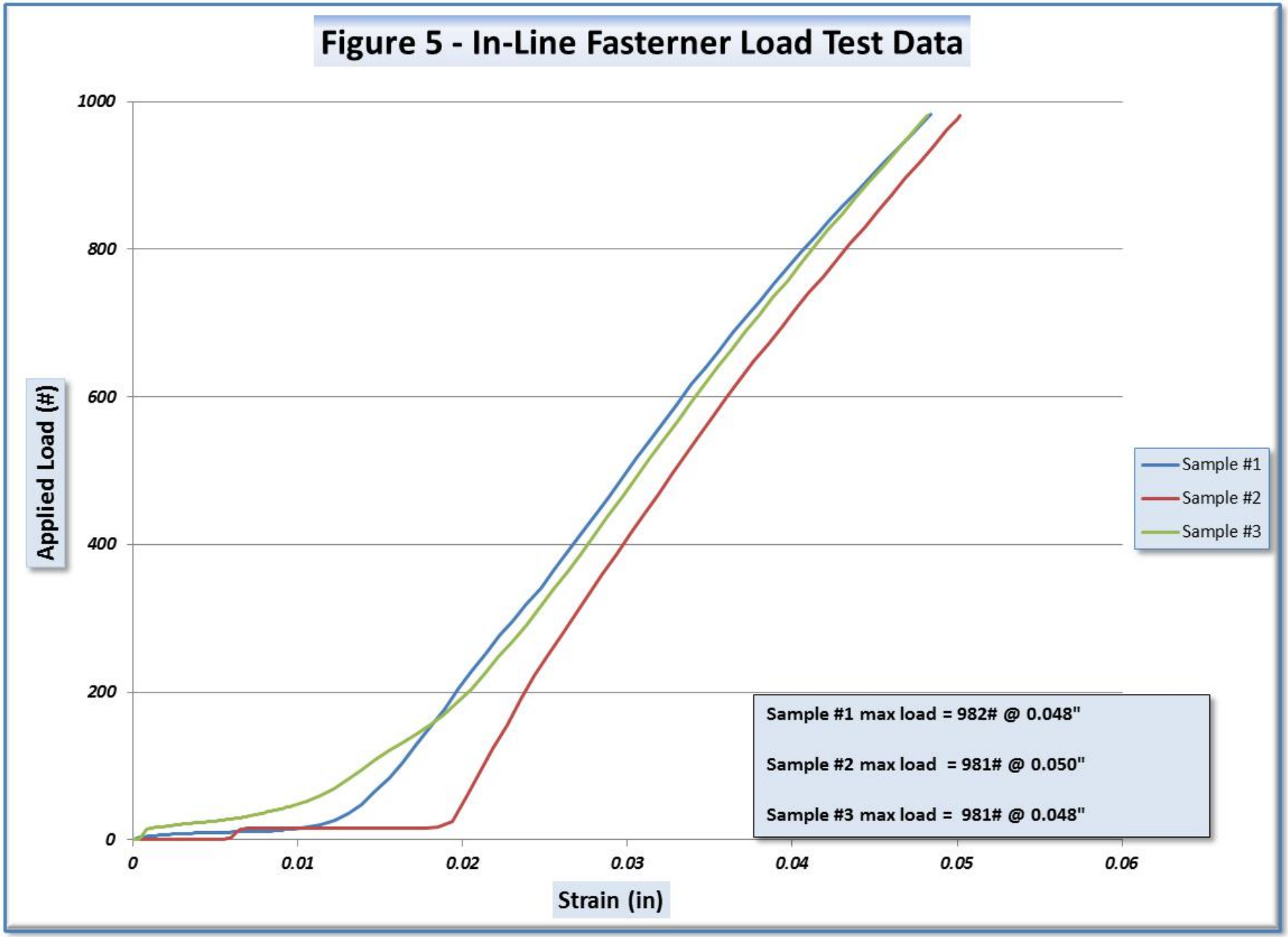
Figure 5 - In-Line Fasterner Load Test Data
Applied Load (#)
1000
800
600
400
200
0
0
0.01
0.02
0.03
0.04
0.05
0.06
Strain (in)
Sample #1
Sample #2
Sample #3
Sample #1 max load = 982# @ 0.048"
Sample #2 max load = 981# @ 0.050"
Sample #3 max load = 981# @ 0.048"

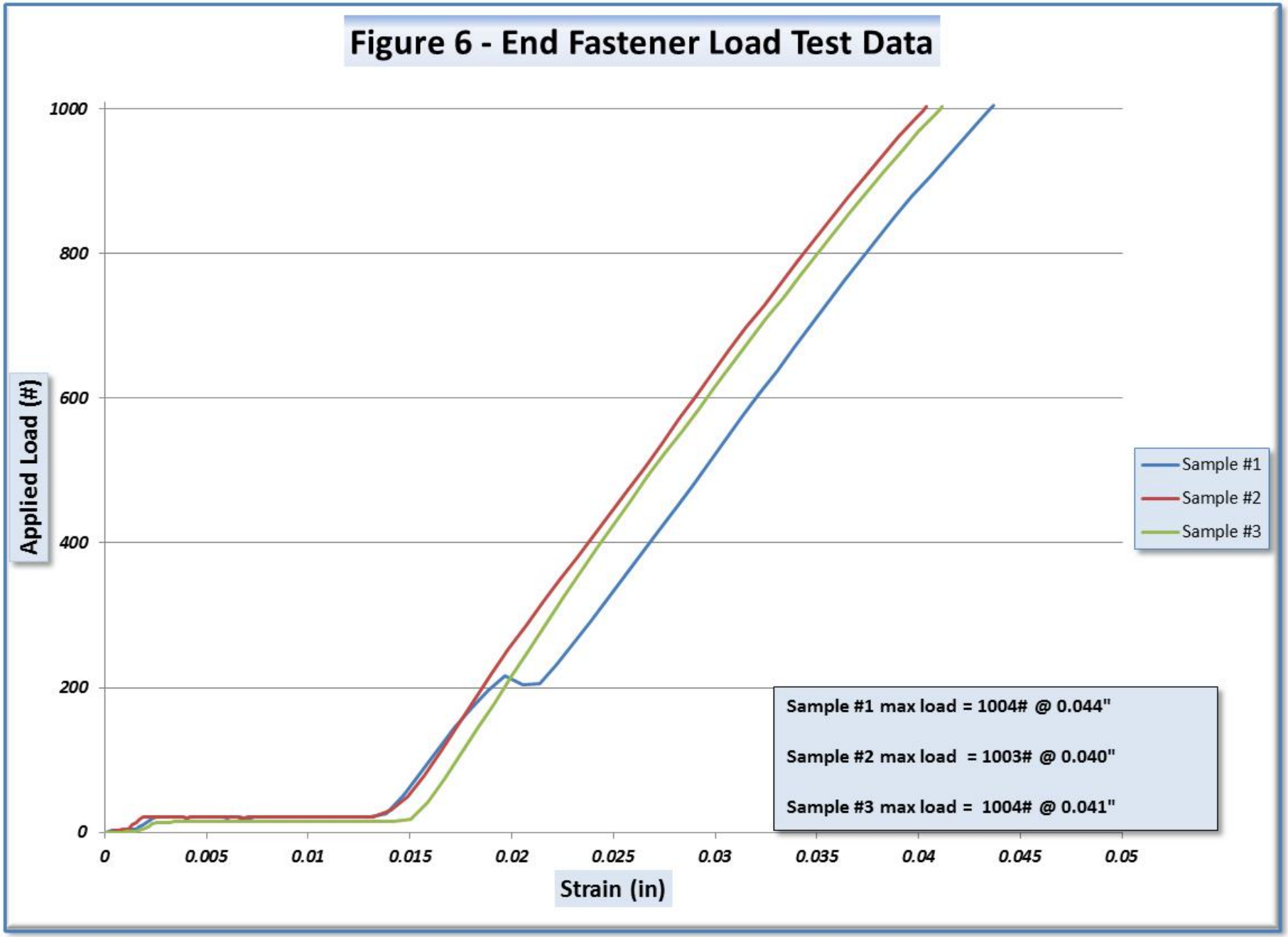
Figure 6 - End Fastener Load Test Data
Applied Load (#)
1000
800
600
400
200
0
0
0.005
0.01
0.015
0.02
0.025
0.03
0.035
0.04
0.045
0.05
Strain (in)
Sample #1
Sample #2
Sample #3
Sample #1 max load = 1004# @ 0.044"
Sample #2 max load = 1003# @ 0.040"
Sample #3 max load = 1004# @ 0.041"

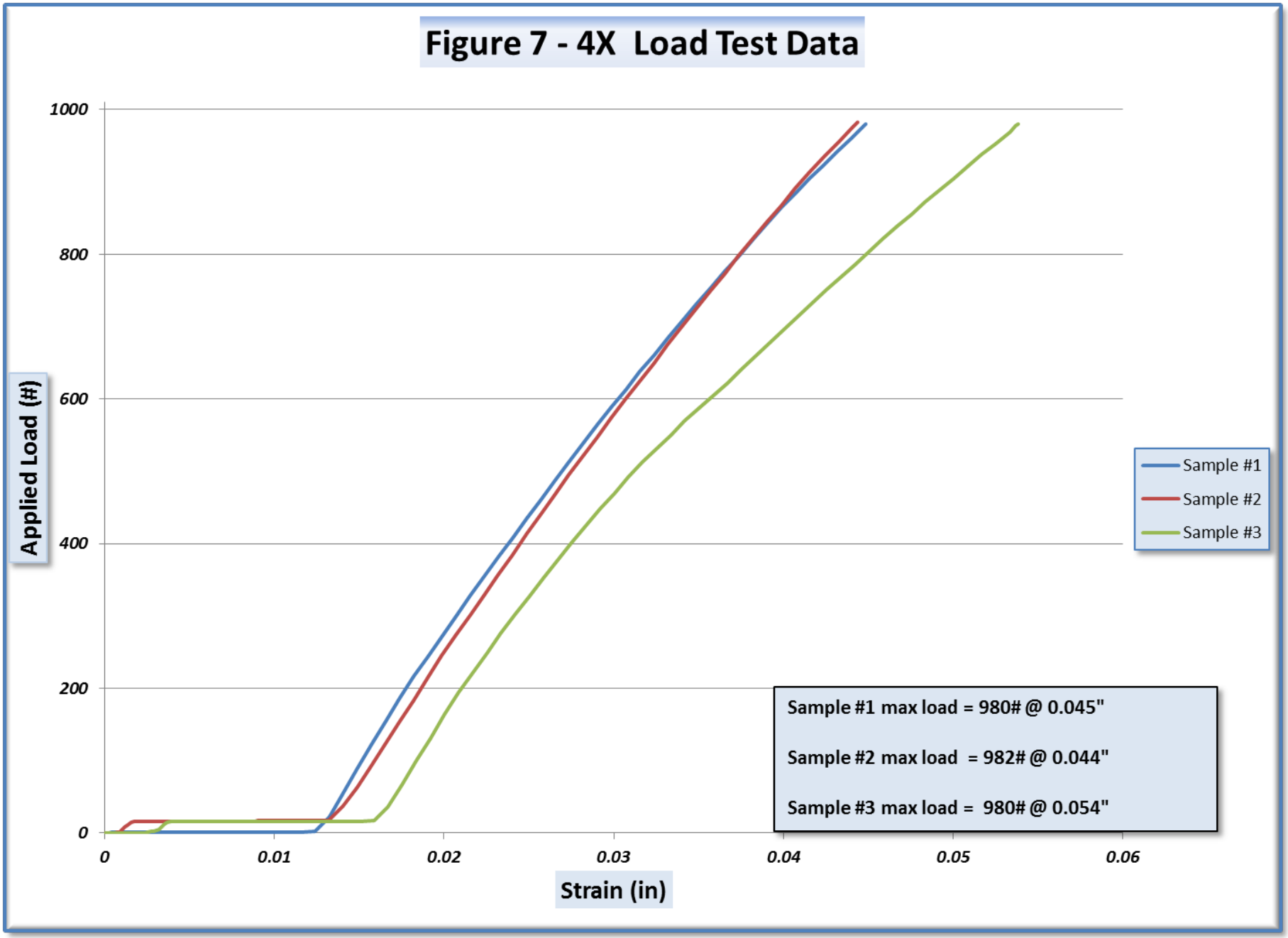
Figure 7 - 4X Load Test Data
Applied Load (#)
1000
800
600
400
200
0
0
0.01
0.02
0.03
0.04
0.05
0.06
Strain (in)
Sample #1
Sample #2
Sample #3
Sample #1 max load = 980# @ 0.045"
Sample #2 max load = 982# @ 0.044"
Sample #3 max load = 980# @ 0.054"

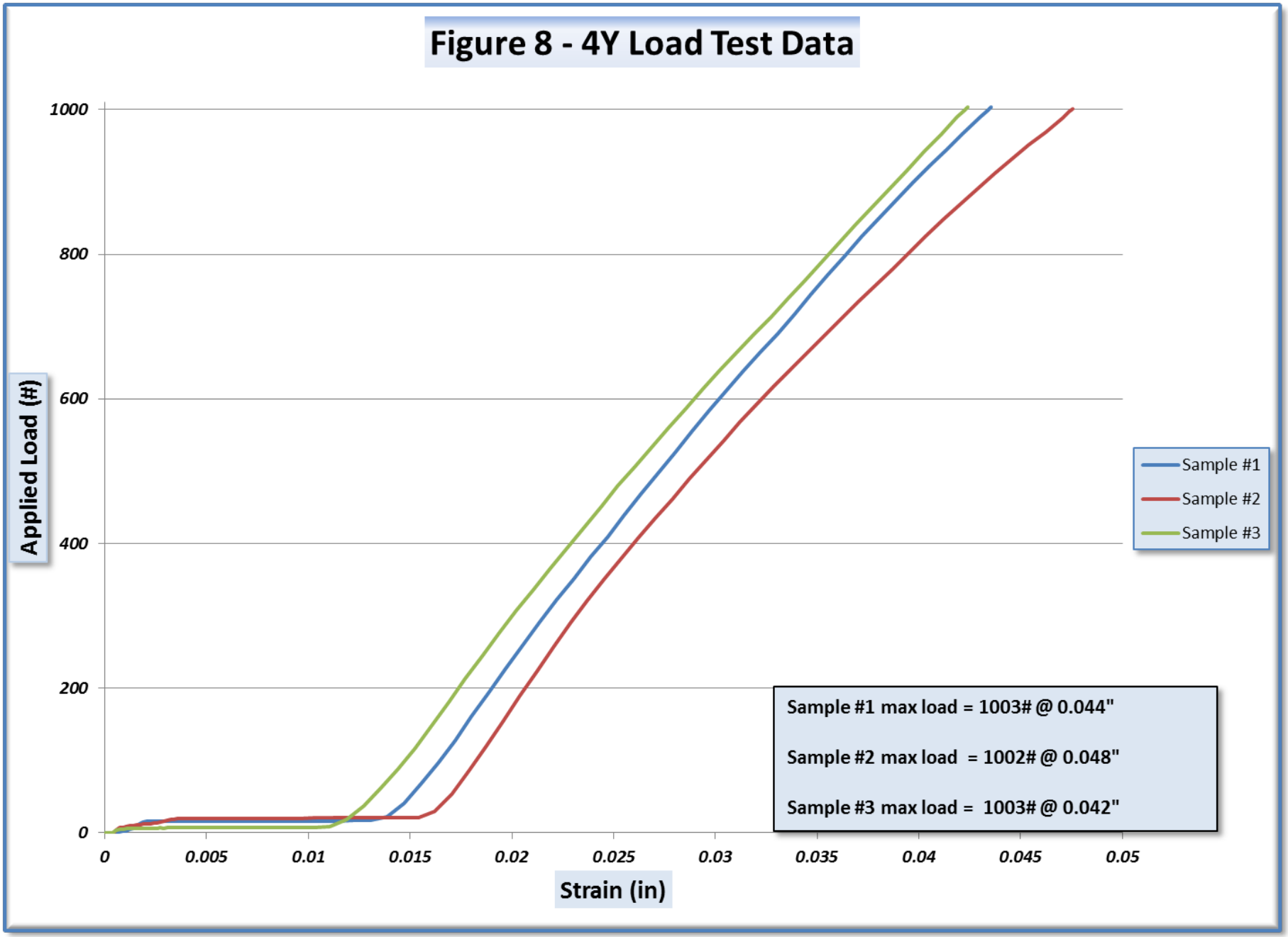
Figure 8 - 4Y Load Test Data
Applied Load (#)
1000
800
600
400
200
0
0
0.005
0.01
0.015
0.02
0.025
0.03
0.035
0.04
0.045
0.05
Strain (in)
Sample #1
Sample #2
Sample #3
Sample #1 max load = 1003# @ 0.044"
Sample #2 max load = 1002# @ 0.048"
Sample #3 max load = 1003# @ 0.042"

Detector	Total Weight (lb)	No. of Columns	Joint Weight (lb)	Applicable Joints	Allowable Load (lb)	Safety Factor
Station 1 Wire Ch.	100	2	50	In-Line, End	327.1	6.5
1X Hodoscope	175	2	87.5	In-Line, End	327.1	3.7
1Y Hodoscope	235	2	117.5	In-Line, End	327.1	2.8
2X Hodoscope	350	2	175	In-Line, End	327.1	1.9
2Y Hodoscope	375	2	93.75	In-Line, End	327.1	3.5
3X Hodoscope	500	4	125	In-Line, 4Y Corner	327.1	2.6
4X Hodoscope	400	4	100	In-Line, 4Y Corner	327.1	3.3
4Y Hodoscope	330	4	82.5	In-Line, 4Y Corner	327.1	4.0
4X Prop Tubes	700	4	175	In-Line, 4X Corner	326.9	1.9
4Y Prop Tubes	700	4	175	In-Line, 4Y Corner	327.1	1.9

Table II – Detector Weights, Joint Loads, Ultimate Loads, and Safety Factors for E906 Detectors

The Allowable Loads used in Table II were determined using the overall minimum average value for the various joint designs used within a given detector. In all cases the actual loads are less than the allowable load. For the purposes of this report, testing was intended to simulate only the joint designs and loading conditions seen in E906. Any changes to the joint design or loading conditions will require further testing.

NOTE: For the 4X Corner Joint, the actual loading condition in the E906 4X Prop. Tube detector differs slightly from that which was tested. Actual loading in E906 is distributed between the vertical and horizontal extrusions. This creates a torque at the corner which was not simulated in this test. For the loads seen in E906 this torque is negligible and further testing is unnecessary.