Status of E-906/SeaQuest

Markus Diefenthaler (UIUC)

The SeaQuest status

- **(so far) unpolarized fixed-target Drell-Yan experiment**:
  - a 120 GeV proton beam extracted from the MI and
  - a moving target table (liquid H and D, solid state nuclei)
- **significant increase in physics reach:**
  - unique access to sea quarks at high-x
  - What is the structure of the nucleon?
  - What is the structure of nucleonic matter?
- **commissioning run 03/07/2012 – 04/30/2013**
- **waiting for beam ~ end of October 2013**

Beam-line problems: 04/11 – 10/13 (tbc)

- **vacuum problems since April 2011**
- **status of the external beam line division** (Mike Geelhoed):
  - light at the end of the tunnel:

    i.e. new berm pipe is 100% through
  - reinstalling magnets in G2 and NM1
  - berm pipe flanges are being fabricated by the machine shop
- **completed by end of October (tbc)**

Commissioning of MI extraction

- large variation in instantaneous intensity, duty factor very low.
- periodic structure – phase locked to AC 60 Hz
- **AD worked on various improvements,** e.g., quad bus filters
- **improved beam diagnostics via SeaQuest beam-line Cerenkov counter**
  → bucket by bucket intensity
- **plan:** test beam diagnostics at MT3 → analyze beam structure while work on SeaQuest beam line is ongoing
- Cerenkov counter needs to be installed at MT3
- readout boards to be finalized

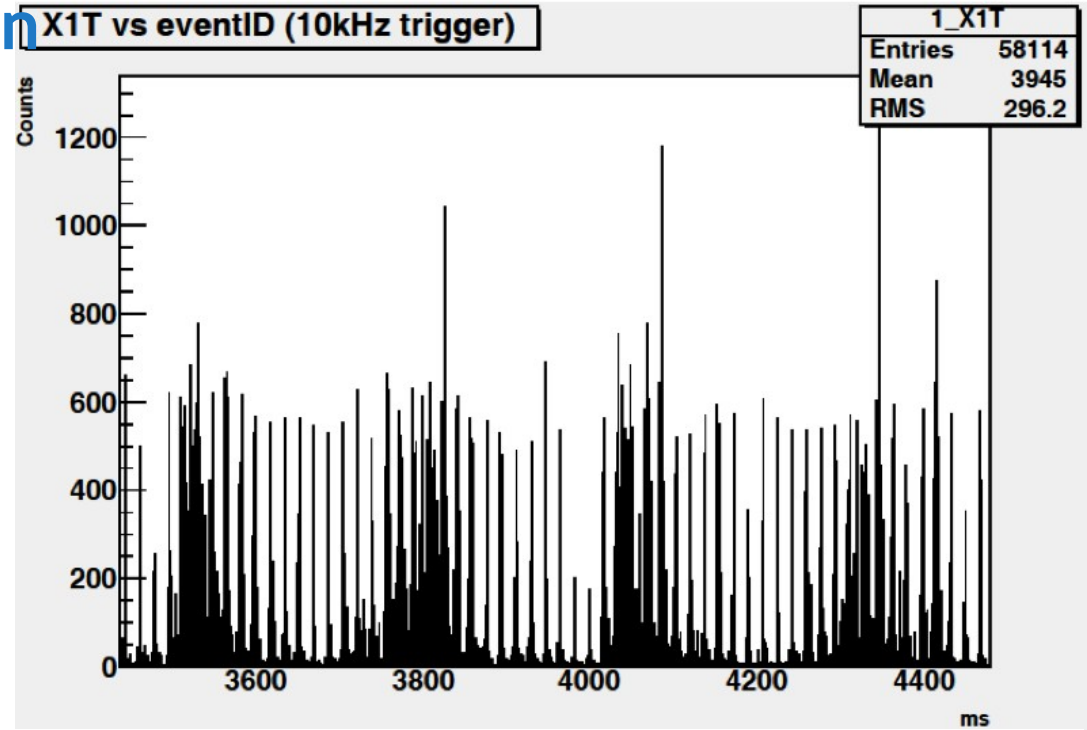

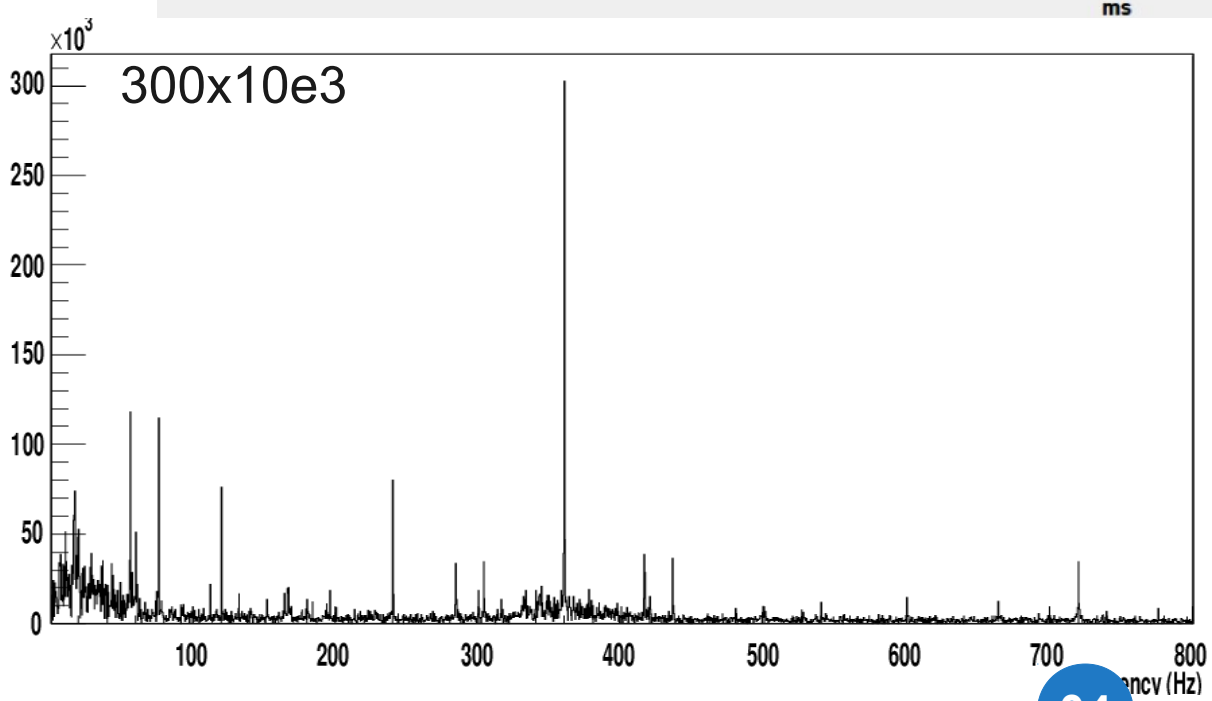

Spectrometer Updates

interim D1

repair completed
reinstalled

new D1 in progress

wire stringing (~ 50%)

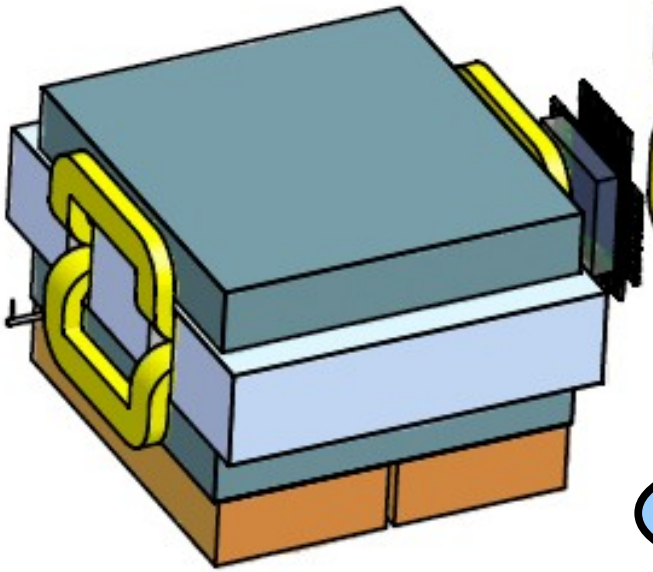

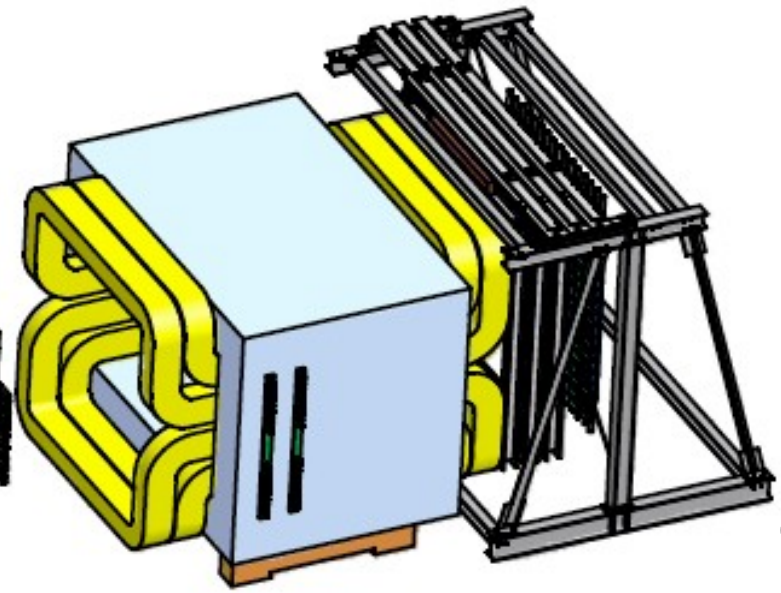

PMT base update

higher-rate capability for H1/H2
installation complete
→ gain-matching in progress

all other components ready

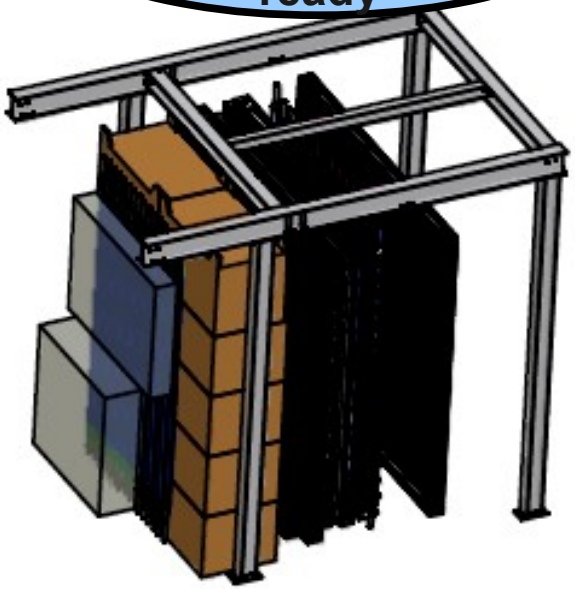

new D3m wire chamber completed

HV training @ -2.6 kV operating voltage with Ar:CO_2 gas

DAQ: Improved TDC for Run II

TDC bin width	~0.44 ns	**calibrated**
minimum width of signal	4 ns	
maximum number of hits in 64 ns	4	
adjustable time window (detector)	4ns – 2048ns	
maximum number of hits per trigger	32 – 1024	
multiple events per IRQ	2 – 32	**tested**
scalar buffer	8 hits / channel	
intrinsic zero suppression (multi-sampling)		**tested**
multiple hits elimination		**tested**

leading edge or leading / trailing edge detection

test with hodoscopes and proportional tubes

Run II TDC working

Trigger Updates

- **updates on trigger hodoscopes completed**
- **trigger road generation:**
  - realistic MC sample significantly improved
  - trigger software suite progressing well
- **pulser test almost completed:**
  - a comprehensive test of the trigger firmware
- **final trigger configuration being installed**

Improved Online Monitoring

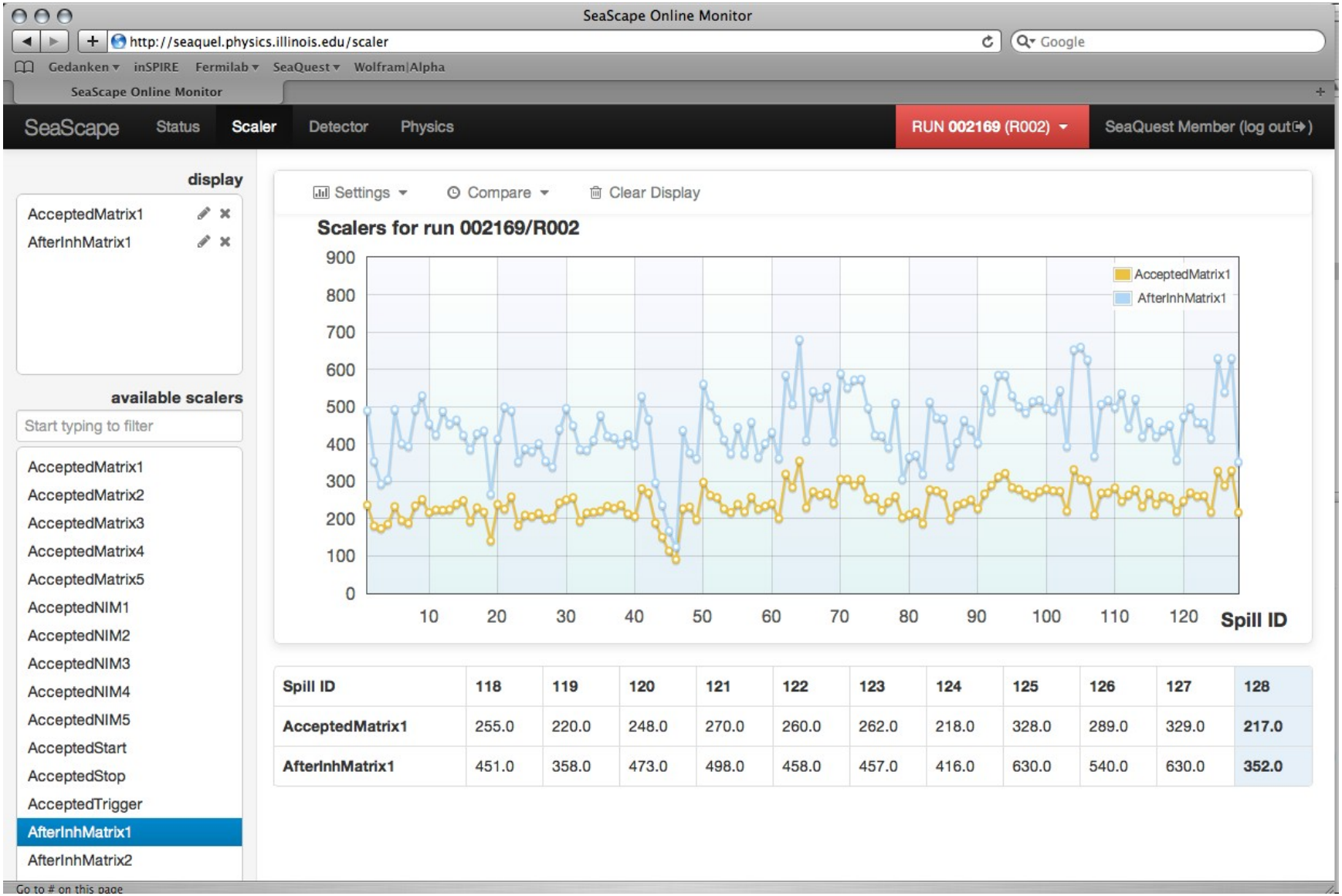

Spill ID	118	119	120	121	122	123	124	125	126	127	128
AcceptedMatrix1	255.0	220.0	248.0	270.0	260.0	262.0	218.0	328.0	289.0	329.0	217.0
AfterInhMatrix1	451.0	358.0	473.0	498.0	458.0	457.0	416.0	630.0	540.0	630.0	352.0