Status of E-906/SeaQuest
– an unpolarized fixed-target Drell-Yan experiment

Markus Diefenthaler (UIUC)

Spectrometer Status

Updates ✔

D1 repaired ✔

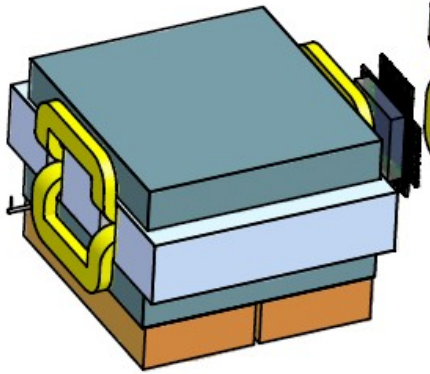

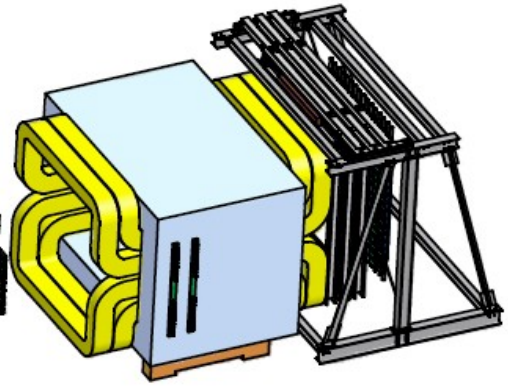

PMT base update ✔

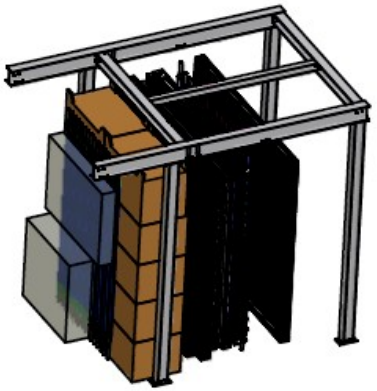

D3m installed ✔

new D1 built at CU-Boulder

ORC ✔

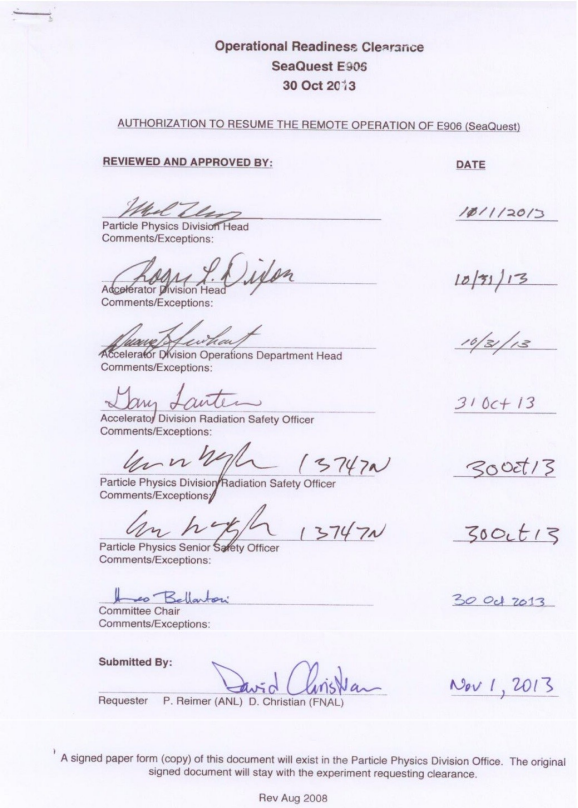

Operational Readiness Clearance
SeaQuest E906
30 Oct 2013

AUTHORIZATION TO RESUME THE REMOTE OPERATION OF E906 (SeaQuest)

REVIEWED AND APPROVED BY:	DATE
Particle Physics Division Head Comments/Exceptions:	10/1/2013
Accelerator Division Head Comments/Exceptions:	10/31/13
Accelerator Division Operations Department Head Comments/Exceptions:	10/31/13
Accelerator Division Radiation Safety Officer Comments/Exceptions:	31 Oct 13
Particle Physics Division Radiation Safety Officer Comments/Exceptions: 13747N	30Oct13
Particle Physics Senior Safety Officer Comments/Exceptions: 13747N	30Oct13
Committee Chair Comments/Exceptions:	30 Oct 2013

Submitted By:
Requester P. Reimer (ANL) D. Christian (FNAL) — Nov 1, 2013

[1] A signed paper form (copy) of this document will exist in the Particle Physics Division Office. The original signed document will stay with the experiment requesting clearance.

Rev Aug 2008

Target ✔	**operational, awaits beam**
Magnets ✔	**operational**
Hodoscopes ✔	calibrated with cosmics, **operational, awaits beam**
Drift Chambers ✔	**operational, await beam,** change gas adiabatically from Ar:CO_2 to P08:CF_4

DAQ / Trigger Status

- custom-made high-rate **TDCs installed and well tested, await beam**
- L(evel)0, L(evel)1, and L(evel)2 **trigger modules installed and operational**
- readout of L0 trigger modules integrated in mainDAQ
- comprehensive **test of trigger firmware** completed:

  → **100.0% purity** and **100.0% efficiency** found in road pulser tests
- **trigger road selection** optimized for:
  - good DAQ livetime
  - good acceptance rate of Drell-Yan events
  - **ToDo:** restructure trigger firmware generation
- **NIM / FPGA trigger comparison:**
  - under discussion
- **trigger systems await beam**

Online Monitoring

- **decoder** ✔ : cross checked, improving high-rate capability
- first release of **SeaScape** ✔
- FNAL web server: many thanks to computing division

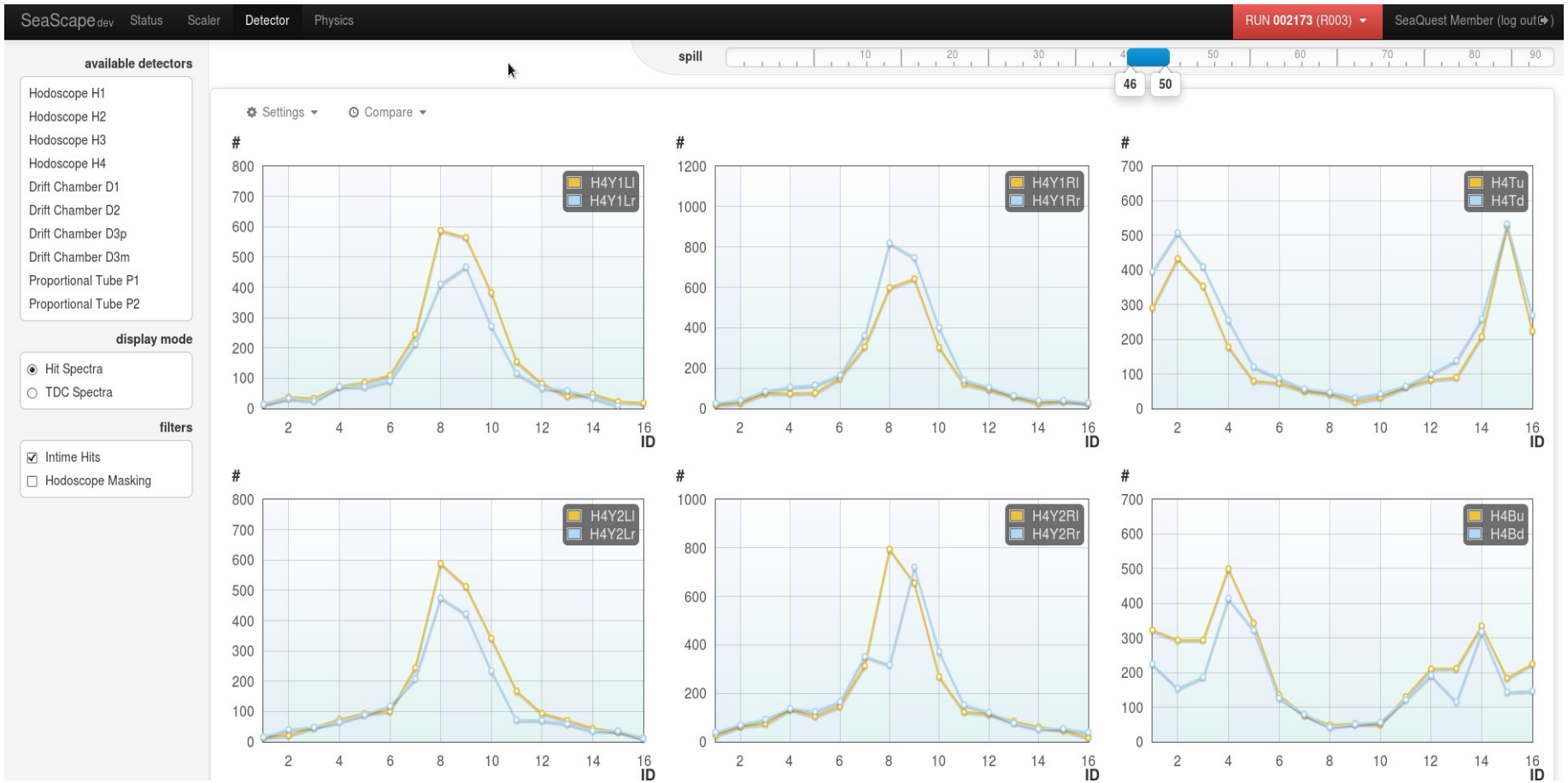

Beam Status

- **Main Injector slow-spill extraction** ✔
- **last week's optimistic estimate:** commissioning beam by November 4th (today)
- **status of external beam-line for SeaQuest:**
  - vacuum problems in the lab-famous berm pipe

    → problem with new pipe or its flanges
  - under investigation by accelerator division
- commissioning of **beam-line Cerenkov counter:**
  - bucket-by-bucket intensity measurement
  - improved beam diagnostics
  - will allow for trigger veto

The E-906/SeaQuest collaboration is looking forward to the commissioning and data taking with the 120 GeV proton beam with a high duty factor!