REV	DESCRIPTION	DRAWN	DATE
		APPROVED	DATE

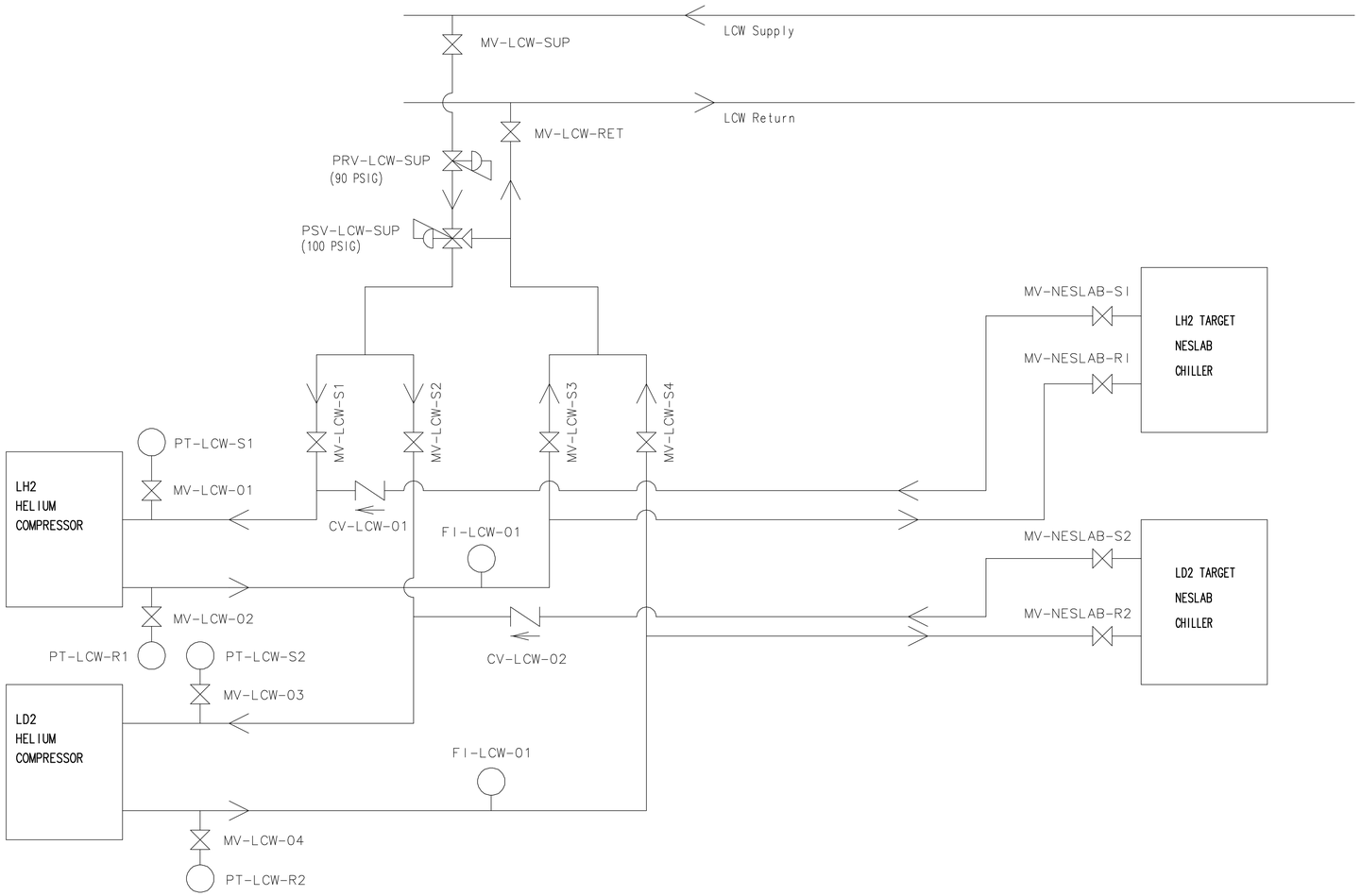

UNLESS OTHERWISE SPECIFIED			ORIGINATOR	D.ALLSPACH	16-JUN-2011
			DRAWN	G.SMITH	16-JUN-2011
±	±	±	CHECKED	J.RAUCH	20-JUN-2011
1. BREAK ALL SHARP EDGES MAX.			APPROVED	D.ALLSPACH	27-JUN-2011
2. DO NOT SCALE DRAWING. 3. DIMENSIONS BASED UPON			USED ON		
4. MAX. ALL MACH. SURFACES ✓			MATERIAL		
5. DRAWING UNITS:					

FERMI NATIONAL ACCELERATOR LABORATORY
UNITED STATES DEPARTMENT OF ENERGY

E906/UTILITIES
HYDROGEN WATER COOLI NG SYSTEM
FLOW DIAGRAM

SCALE	DRAWING NUMBER	SHEET	REV
NONE	3906.604-MD-489172	1 OF 1	

CREATED WITH : Ideas12NXSeries GROUP: PPD/MECHANICAL DEPARTMENT

Created: 09:16:46 on 28-06-11 (D-M-Y) By: gsmith State: 1-INITIAL